TSURUMI PUMP

MODEL TE2-25HA

PARTS LIST		CONTRACTOR PUMP				3/25/2013
ITEM	PART No.	DESCRIPTION	QTY	SIZE	MATERIAL	NOTES
1	200 201 180	CASING COVER	1		AC	
2	203 000 010	HEX.SOCKET BOLT M5x25	4			
3	203 100 030	AL WASHER 5x12x0.8	4		AL	
4	201 100 011	MECHANICAL SEAL 1'	1			
5	200 800 010	O-RING W1517-31	1		NBR	
6	200 201 190	IMPELLER	1		AC	
7	200 201 200	INNER CASING	1		FC	
8	200 800 030	O-RING P-41	1+(1)		NBR	
9	200 200 040	CASING OEL-25	-1		AC	
10	203 000 020	HEX.BOLT M8x30 P=3	4		SWCH	
11	200 300 020	HANGER	1		SPC	
12	200 900 010	CHECK VALVE	1		SPC	
13	200 200 050	VALVE CASE PF1	-1		ADC	
14	1400 1001450	HEX.BOLT M6x20 P=3	3			
15	200 500 010	PRIMING PLUG ASSY	1		RESIN / NBR	
16	200 500 040	PLUG ASSY	1		RESIN / NBR	INCLUDES ITEM #17
17	200 800 020	O-RING P-24	-1		NBR	
18	200 900 500	RUBBER	4		NBR	
19	200 101 150	PIPE BASE(BLACK)	1		SPC	
20	200 900 030	COUPLING PACKING NBR	2		NBR	
21	200 500 030	HOSE COUPLING 1",2"				
22	200 500 020	COUPLING HANDLE PF1	2		RESIN	
23	201 000 020	HOSE BAND 1",3"				
24	201 200 010	STRAINER 1J	1			
25	200 500 050	HOSE COUPLING 3/4",1"				
26	201 000 010	HOSE BAND 3/4",1"				

* Indicates items included in set

TSURUMI PUMP

MODEL TE2-25HA

PARTS LIST		CONTRACTOR PUMP				3/25/2013
ITEM	PART No.	DESCRIPTION	QTY	SIZE	MATERIAL	NOTES
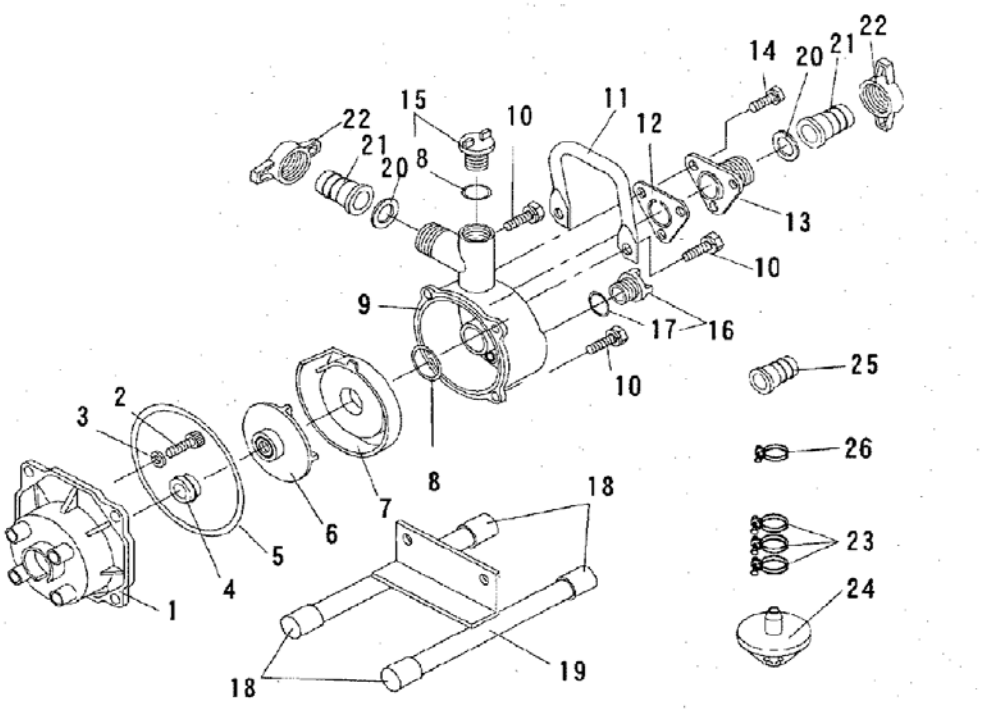
TE2-25HA