TSURUMI PUMP

BER - SERIES
SUBMERSIBLE EJECTOR / AERATOR

SECTIONAL VIEW

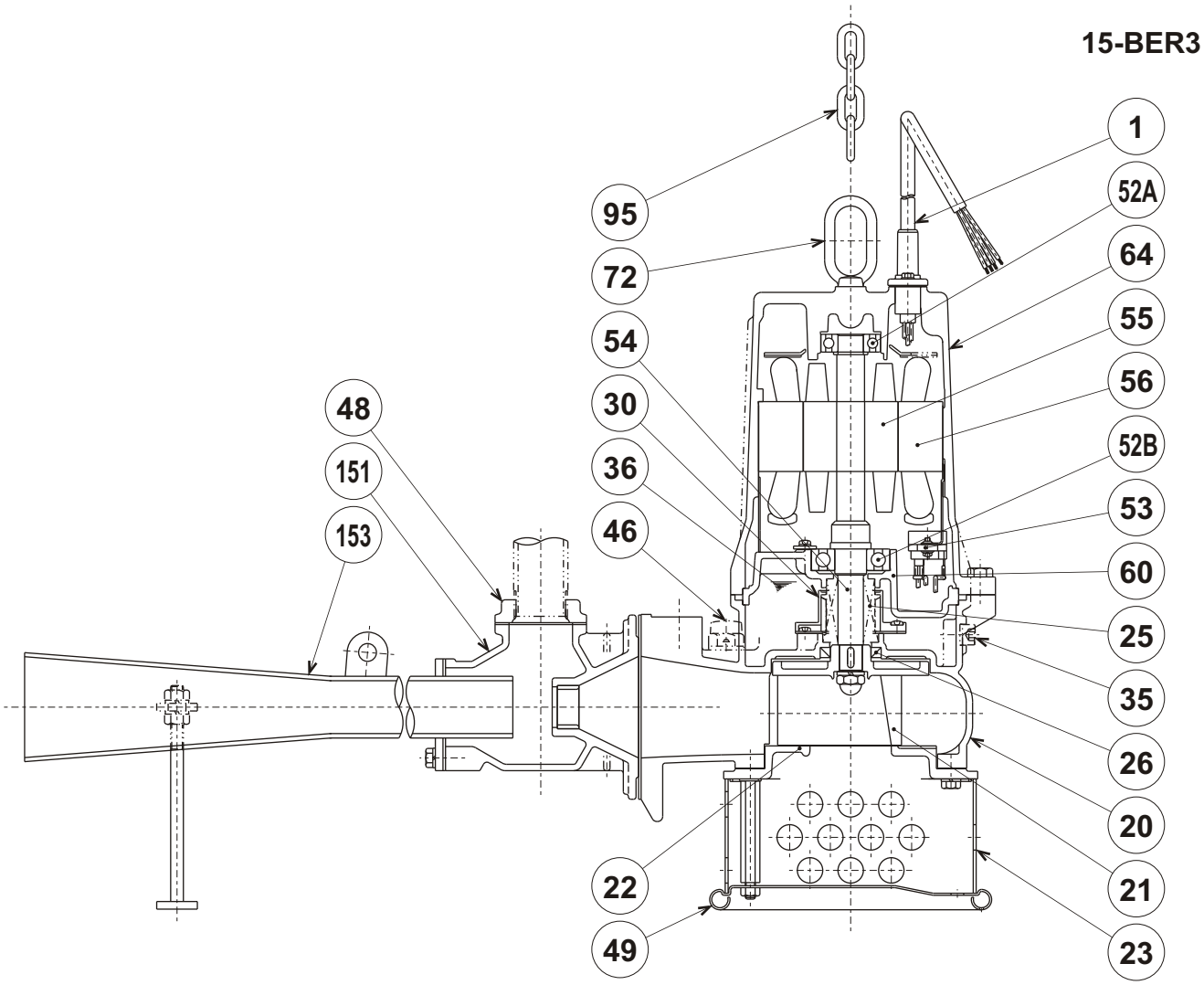

PART#	DESCRIPTION	MAIN MATERIAL / NOTE	ASTM, AISI CODE	RELATED DIN CODE	QTY
1	Power Cable	PVC Sheath AWG16/4- 32ft			1
20	Pump Casing	Cast Iron	A48M Class30B	EN 1561 GJL-200	1
21	Impeller	Cast Iron	A48M Class30B	EN 1561 GJL-200	1
22	Suction Cover	Cast Iron	A48M Class30B	EN 1561 GJL-200	1
23	Suction Strainer	Steel (Hot Rolled)	A1011	EN 10111	1
25	Mechanical Seal	Silicon Carbide / H-20A			1
26	Oil Seal	NBR / TC-32488			1
30	Oil Lifter	PBT Plastic w/(GF+MD)40			1
35	Oil Plug	Stainless Steel	S 30400	1.4301	1
36	Lubricant	Turbine Oil ISO VG32 or SAE 10W-20			
46	Air Valve	Nylon			1
48	Companion Flange	Cast Iron	A48M Class30B	EN 1561 GJL-200	1
49	Bottom Plate	Steel (Cold Rolled)	A109/A1008	EN 10130	1
52A	Upper Bearing	6204ZZC3			1
52B	Lower Bearing	6305ZZC3			1
53	Motor Protector				1
54	Shaft	Stainless Steel	S 42000	1.4028	1
55	Rotor				1
56	Stator				1
60	Bearing Housing	Cast Iron	A48M Class25B	EN 1561 GJL-150	1
64	Motor Housing	Cast Iron	A48M Class25B	EN 1561 GJL-150	1
72	Lifting Lug Bolt	Stainless Steel	S 30400	1.4301	1
95	Chain	Steel - 16ft	A283 Grade D	EN 10025 S275	1
151	Suction Casing	Cast Iron	A48M Class30B	EN 1561 GJL-200	1
153	Diffuser	Stainless Steel	S 30400	1.4301	1