TSURUMI PUMP

MODEL **KTZ611-61**

PARTS LIST		HI-VOLUME DEWATERING PUMP				11/8/2019
ITEM	**PART No.**	**DESCRIPTION**	**QTY**	**SIZE**	**MATERIAL**	**NOTES**
1	140-101-12	Hex.Bolt	6	M12x50	SUS304	
2	142-165-10	Spring Washer	6	M12	SUS304	
3	070-117-11	L-Shape Fitting	1	40x25x4.5t d13Hole	SPC	
4	068-264-17	Handle	1	KTZ411/611	SGP+SS	
5	001-844-36	Cabtyre Cable Set (50') 60Hz(USA)	1	2PNCTF4Cx8mm2	GHZ	
6	010-122-10	Cable Clip Rubber	1	No.2	NBR	
7	010-120-18	Cable Clip	1	No.2-1	SPC	
8	141-004-59	Hex.Nut	1	M6	SWRM	
9	140-032-37	Hex.Bolt	1	M6x15	SWRM	
10	095-000-95	Chain	1	4mm(4L)	SS	replaces OLD# 095-131-18 (3L)
11	011-110-11	Shackle	1	6mm(M8,SC)	SS	
12	140-076-17	Hex.Bolt	2	M10x30	SUS304	
13	003-183-23	Gland	1	GHZ-311W	FC	
14	002-103-26	Cable Protection Tube	1	No.3	NR	
15	005-122-17	Bush Washer	2	d23xd53.5x3.2t	SPC	
16	004-129-11	Cable Bush	1	d22.5xd54x25l	NBR	
17	140-055-10	Hex.Bolt	4	M8x25	SUS304	
18	006-160-10	Stuffing Box	1	GHZ-311W	FC	
19	122-128-19	O-Ring	1	G-85(84.4xd3.1)	NBR	*
20	009-129-16	Terminal	4	E (Small)	CU	
21	009-101-12	Terminal(C/W Screw)	4	d12x(d6.6xd6.6)x25l	C3604	
22	009-129-16	Terminal	4	E (Small)	CU	
23	002-129-15	Heat Shrink Tube (Sold per meter)	m	EVA(d14x1t)	(\/m)	
24	002-132-11	Heat Shrink Tube (Sold per meter)	m	A4(d17x0.27t)	(\/m)	
25	140-099-16	Hex.Bolt	5	M12x40	SUS304	
26	032-378-14	Hose Coupling	1	4" NPT	FC	standard
	032-254-13	Hose Coupling	1	6" NPT	FC	OPTIONAL Interchangable with OLD part# 032-001-03
27	121-374-19	Packing	1	d140xd172x1t	THREE SHEET	*
28	143-164-25	Pan Screw (w/Spring Washer)	1	M6x8	C3604	
29	009-296-15	Earth Terminal	1Set	8mm2x180L		
30	050-000-04	Motor Bracket	1		FC	
31	122-173-19	O-Ring	1	V-225(222.5xd6)	NBR	*
32	053-000-04	Motor Protector 220V-60Hz(USA)	1	KA315-JTXL00	(B.C)	
32	053-000-24	Motor Protector 440V-60Hz(USA)	1	KA315-JKZL00	(B.C)	
32	053-000-25	Motor Protector 575V-60Hz(USA)	1	KA315-JKVL00	(B.C)	
33	143-125-24	Pan Screw (w/Spring Washer/Plain Washer)	2	M4x14	SWRM	
34	142-198-12	Wave Washer	1	6306	SK5	
35	052-109-14	Bearing	1	6306ZZC3		

* Indicates items included in set

TSURUMI PUMP

MODEL **KTZ611-61**

PARTS LIST		HI-VOLUME DEWATERING PUMP				11/8/2019
ITEM	**PART No.**	**DESCRIPTION**	**QTY**	**SIZE**	**MATERIAL**	**NOTES**
36	122-245-13	O-Ring	1	71.4xd3.1	NBR	*
37	058-000-03	Lead Wire Protection Plate	1	d96xd224.5x1.5t	Bakelite	
38	055-000-11	Rotor	1Set			
39	147-022-19	Impeller Key	1	7x7x28L	SUS420	
40	056-000-24	Stator 220V-60Hz(USA)	1Set			
40	056-000-26	Stator 440V-60Hz(USA)	1Set			
40	056-000-28	Stator 575V-60Hz(USA)	1Set			
41	121-504-10	Packing (Water Way, Upp.)	1	KTZ411/611	NBR	*
42	064-000-04	Motor Frame	1		FC	
43	140-080-14	Hex.Bolt	4	M10x45	SUS304	
44	142-164-19	Spring Washer	4	M10	SUS304	
45	140-000-06	Hex.Bolt (w/Spring Washer/Plain Washer)	4	M6x12	SWCH	
46	052-112-10	Bearing	1	6309ZZC3		
47	122-285-15	O-Ring	1	155xd3.1	NBR	*
48	060-000-88	Bearing Housing	1		FC	
49	140-269-19	Hex.Socket Cap Bolt	4	M8x25	SUS304	
50	025-000-02	Mechanical Seal	1	HT-3035N	SIC	
51	143-070-23	Pan Screw	2	M5x6	SWRM	
52	030-138-14	Oil Lifter	1	HT-3035	Resin	
53	143-070-10	Pan Screw	6	M5x6	SWRM	
54	030-147-16	Seal Stopper	1	HT-3035	SPCC	
55	122-285-15	O-Ring	1	155xd3.1	NBR	*
56	121-503-19	Packing (Water Way, Low.)	1	KTZ411/611	NBR	*
57	029-333-17	Oil Casing	1	KTZ47.5/611	FC	
58	142-163-18	Spring Washer	4	M8	SUS304	
59	140-055-10	Hex.Bolt	4	M8x25	SUS304	
60	121-247-12	Packing	1	d12.3xd18x2t	PE	*
61	035-113-18	Oil Plug	1	M12x14	SUS304	
62	071-198-19	Shaft Sleeve	1	d25xd35x17l	SUS403	
63	020-001-06	Pump Casing	1	KTZ411/611	FC	
64	142-164-19	Spring Washer	2	M10	SUS304	
65	140-449-15	Hex.Bolt	2	M10x140	SUS304	
66	122-360-15	O-Ring	1	46.5xd2.5	NBR	*
67	026-238-12	Labyrinth Ring	1	GHV/GHZ-7.5/11KW	SUS304	
68	040-107-28	Impeller Shim		d25.2xd38x0.3t	SUS304	
69	021K8516	Impeller (60Hz)	1	KTZ611-61	HiCrFC	
70	047-105-14	Impeller Thread Protect.Cover	1	No.4(22)	SPC	
71	141-009-38	Hex.Nut	1	M20(H=12)	SUS304	

* Indicates items included in set

TSURUMI PUMP

MODEL **KTZ611-61**

PARTS LIST		HI-VOLUME DEWATERING PUMP				11/8/2019
ITEM	**PART No.**	**DESCRIPTION**	**QTY**	**SIZE**	**MATERIAL**	**NOTES**
72	141-034-16	Hex.Cap Nut	1	M20	SUS304	
73	120-111-13	Packing (S.Cover)		d221xd268x0.3t	PE	
74	022-000-57	Suction Cover	1	KTZ67.5/611	FCD	
75	142-128-24	Plain Washer	3	M10	SPC	
76	140-075-16	Hex.Bolt	3	M10x25	SUS304	
77	142-128-24	Plain Washer	3	M10	SPC	
78	144-000-57	Stud Bolt	3	M10x124(26/14)	SUS410	replaced OLD part# 144-119-15 (SUS403)
79	023-252-13	Strainer	1	KTV-75/110	SPC	
80	049-133-20	Bottom Plate	1	KRS-C3/A3	SPC	
81	142-128-24	Plain Washer	3	M10	SPC	
82	141-006-77	Hex.Nut	3	M10	S45C	
	173-000-44	**Packing O-Ring Set**	1Set	(Marked by *)		
19	122-128-19	O-Ring (S.Box)	1	G-85(84.4xd3.1)	NBR	*
27	121-374-19	Packing (Hose Coupling)	1	d140xd172x1t	THREE SHEET	*
31	122-173-19	O-Ring (M.Bracket/M.Frame)	1	V-225(222.5xd6)	NBR	*
36	122-245-13	O-Ring (Upp. Bearing)	1	71.4xd3.1	NBR	*
41	121-504-10	Packing (Water Way, Upp.)	1	KTZ411/611	NBR	*
47	122-285-15	O-Ring (M.Frame/Brg.Housing)	1	155xd3.1	NBR	*
55	122-285-15	O-Ring (Brg.Housing/O.Casing)	1	155xd3.1	NBR	*
56	121-503-19	Packing (Water Way, Low.)	1	KTZ411/611	NBR	*
60	121-247-12	Packing (Oil Plug)	1	d12.3xd18x2t	PE	*
66	122-360-15	O-Ring (Labyrinth Ring)	1	46.5xd2.5	NBR	*
		Lubricant		Turbine Oil VG32 760ml		
	183-009-12	Impeller Puller	1	A No.4 1"1/4"	FC	

* Indicates items included in set

TSURUMI PUMP

MODEL **KTZ611-61**

PARTS LIST		HI-VOLUME DEWATERING PUMP				11/8/2019
ITEM	PART No.	DESCRIPTION	QTY	SIZE	MATERIAL	NOTES

EXPLODED VIEW

KTZ611-51/61

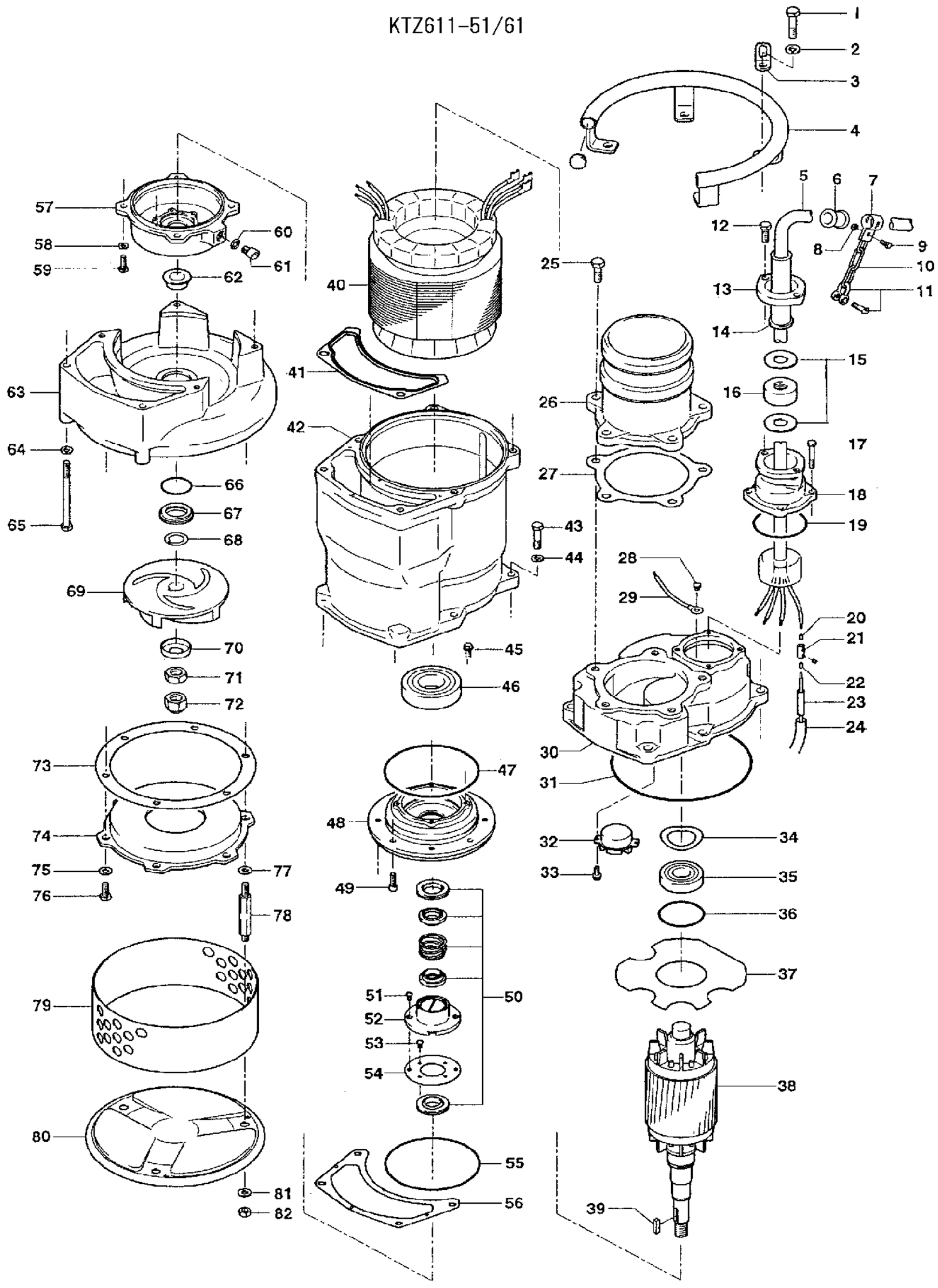

* Indicates items included in set

TSURUMI PUMP

MODEL **KTZ611-61**

PARTS LIST		HI-VOLUME DEWATERING PUMP				11/8/2019
ITEM	PART No.	DESCRIPTION	QTY	SIZE	MATERIAL	NOTES

* Indicates items included in set