AVANT™

TSURUMI PUMP™

Explosion Proof. IE3 Premium Efficiency Motor.

AVANT™

The **AVANT™ MQ Series** is a new line of submersible pumps developed by Tsurumi Pump, an industry leader in submersible pumps for over 95 years. The **AVANT™** features an FM approved design, premium IE3 motors, and closed loop cooling jackets. They have been designed to operate over a wide range of conditions; with multiple options for impellers, motors and mounting configurations. The **AVANT™** series can offer a pump for almost every application!

The **AVANT™ MQ Series** engineers focused on **3 key concepts** during the development of this new line.

Innovation

Innovation, defined as making changes to the established norms, introducing new ideas and product improvements. The **AVANT™** line meets this definition by using premium IE3 motors, operating over a wide range of conditions, and its advanced closed loop cooling jacket.

The **AVANT™ MQ Series** is innovative in performance and technology.

Reliability

Reliability, the quality of performing consistently well. The **AVANT™** is designed and manufactured for years of trouble-free operation with low maintenance costs.

The **AVANT™ MQ Series** is the result of advanced design, state of the art manufacturing facilities and a proven assembly process.

Efficiency

Efficiency, the work performed by the pump vs. the energy used. Over time, operating costs far surpass other cost factors (purchase, installation and maintenance). The **AVANT™ MQ Series** premium IE3 motors combined with our proven impeller designs maximize efficiency resulting in long term cost savings.

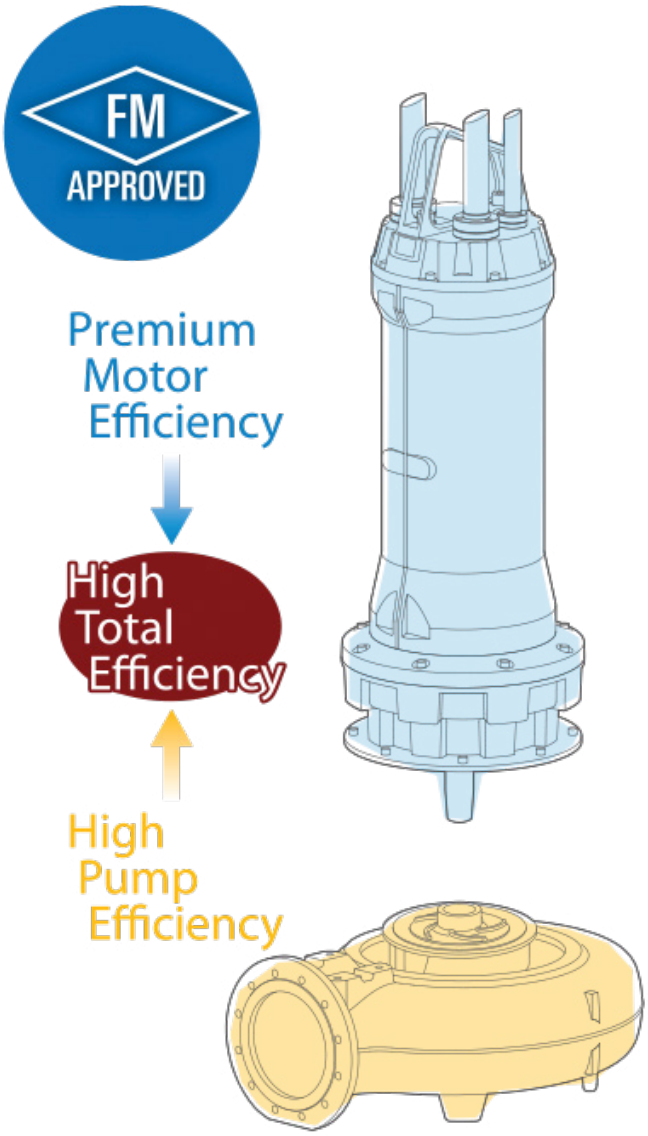

The **AVANT™ MQ Series** Our larger operating ranges allow the premium IE3 motors to work in conjunction with the **AVANT™**'s high-efficiency **hydraulics**. The result is a pump optimized for your duty point. The **AVANT™ MQ Series**, an innovative, reliable and efficient pump to meet your submersible pumps needs.

Tailor-made solutions

The **AVANT™ MQ Series** has been developed to optimize performance at your duty point, with energy savings resulting from our IE3 premium efficiency motors and high-performance hydraulics.

The **AVANT™ MQ Series** brings effective solutions over wider operating ranges to meet the most demanding duty points.

A modular range

The **AVANT™ MQ Series** is designed with **modularity** in mind. This approach gives the customer access to the largest number of motor-hydraulics-material combinations, so every model is optimized for its intended use.

Varying impeller diameters and materials can be combined with motors of different voltages and HP powers for peak efficiency. Add in our multiple mounting options and you truly have a modular solution to multiple pumping requirements.

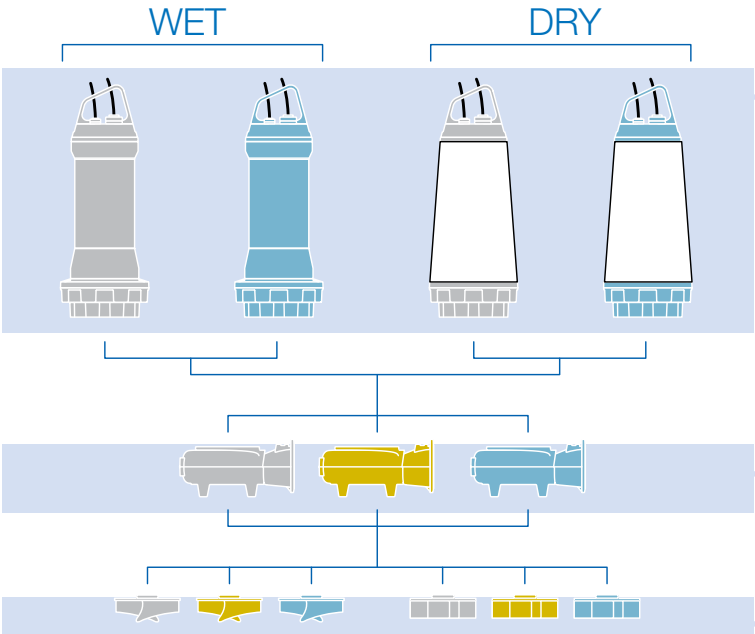

Motor in efficiency class IE3

- From 4 HP to 215 HP
- From 2 to 6 poles
- WET and DRY version

High-performance hydraulics

- From 2" to 16" ANSI Flanged

Impeller

- Open channel (**MQB**)
- Chopper (**MQC**)
- Vortex (**MQU**)
- Grinder (**MQG**)
- High head (**MQS**)

More materials, more reliability

The **AVANT™ MQ Series** is designed to handle special and specific applications, the standard iron hydraulics can be replaced with bronze, stainless steel or Tsurumi's ***Molib-Tech***. This coating has been designed to maintain pump performance in even the toughest environments. ***Molib-Tech*** out performs, and lasts significantly longer than conventional ceramic coating systems.

The **AVANT™** offers the user longer maintenance intervals, lower rates of system stoppages and decreased running costs vs. conventional pumps in the market today.

MQ Series

The **AVANT™ MQ Series** has as standard, an IE3 premium efficiency motor. With the **AVANT™ MQ series**, overall efficiency and energy-savings have been improved over standard pump offerings. By pursuing greater efficiency in both the hydraulics and motor designs, Tsurumi can improve operational costs over the life cycle of the pump.

THE AVANT™ MQ SERIES ADVANTAGES

- Explosion-proof (FM Approved Design)
- Operating temperature up to 104°F
- PATENTED closed loop cooling jacket with internal recirculation
- Class H electric motor from 4 HP to 215 HP, efficiency class IE3
- 5 types of impellers (Open Channel, Chopper, Vortex, Grinder and High Head)
- WET or DRY Pit configurations available
- Cast iron structure (stainless steel on request)
- Thermal protection sensors incorporated into the stator
- Long life bearings (100,000 hours)
- AISI 431 drive shaft (AISI 329 on request)
- Leakage detection system in seal chamber (standard) and motor (on request)
- Two silicon carbide mechanical seals in large oil chamber
- ANSI Discharge size from 2" to 16"

Overview of operating ranges

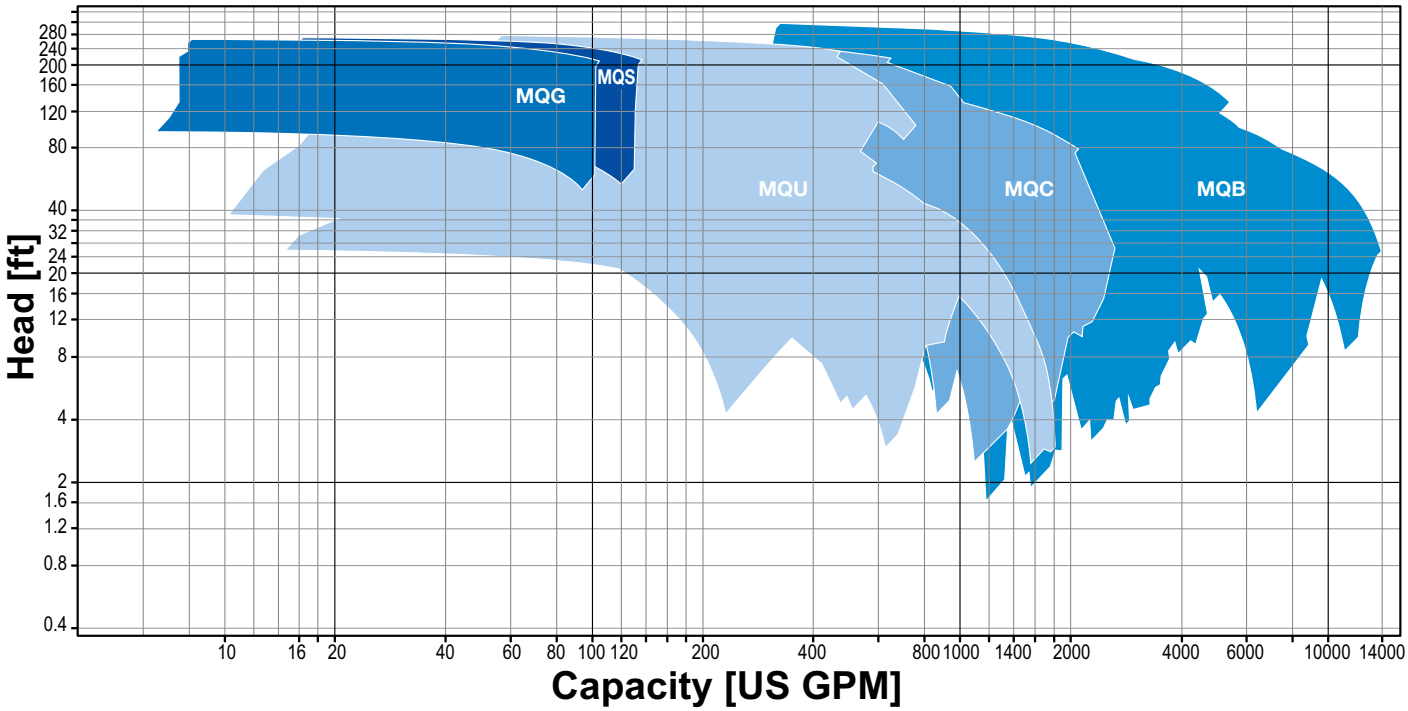

Construction materials

	Standard	Optional*
Lifting handle	Stainless steel	-
Motor Housing	Cast Iron	Stainless steel
Drive shaft	AISI 431	AISI 329
Cooling jacket	AISI 304	-
Gaskets	Viton	-
Nuts and bolts	A2-70 Stainless Steel	A4-80
Hydraulics	Cast Iron	AISI 316 / AISI 329 Duplex / *Molib-Tech*
Impeller	Cast Iron	AISI 316 / AISI 329 Duplex / Br-Al /*Molib-Tech*

* Consult Factory

Standard equipment and options

		Standard	Optional*
Power voltage tolerance		Max ± 5% (S1 duty)	-
Efficiency class		IE3 - Premium Efficiency	-
Motor insulation class		H	-
Starting		D.O.L, Soft Start	Star-Delta
Cable length		32 ft	65 - 98 - 131 - 164 ft
Painting		Bicomponent epoxy - 7.9 thou	Bicomponent epoxy - 15.7 thou
Mechanical seals		2 SiC/SiC mechanical seals in oil chamber	-
Thermal sensors		Bimetal thermal sensors (302 °F)	PTC/PT100 thermistors
Type of installation		Submersible (WET version)	Dry (DRY version) DRY version available with 5.5 HP and above but, closed jacket cooling system is installed from 7.5 HP and above.
Monitoring	Motor	Bimetal thermal sensors (302ºF)	PTC/PT100 themistors
		Single-signal double leakage detector	Single leakage detector
	Oil chamber	Single-signal double leakage detector	Single leakage detector
	Terminal Board	-	Single leakage detector
	Bearings	-	Overheating (PTC/PT100 themistors)
		-	Vibrations detector
Sacrificial anodes		NO	YES
Vibration sensors (bearings)		NO	YES
Temperature sensors (bearings)		NO	PTC/PTC100
Explosion-proof		FM Approved: Class I, Division 1, Groups C and D Class I, Division 1, Groups C and D, T3C / Class II, Division 1, Groups E,F and G, T3C	

* Consult Factory

The date provided is not binding.
Tsurumi Pump reserves the right to modify any product without notice.

TASS
TSURUMI AVANT SELECTION SYSTEM

The TASS website features application software to aide in pump selection and configuration. Access authorized upon request - Contact your Tsurumi Regional Sales Manager for more details.

FEATURES

FM APPROVED

WET

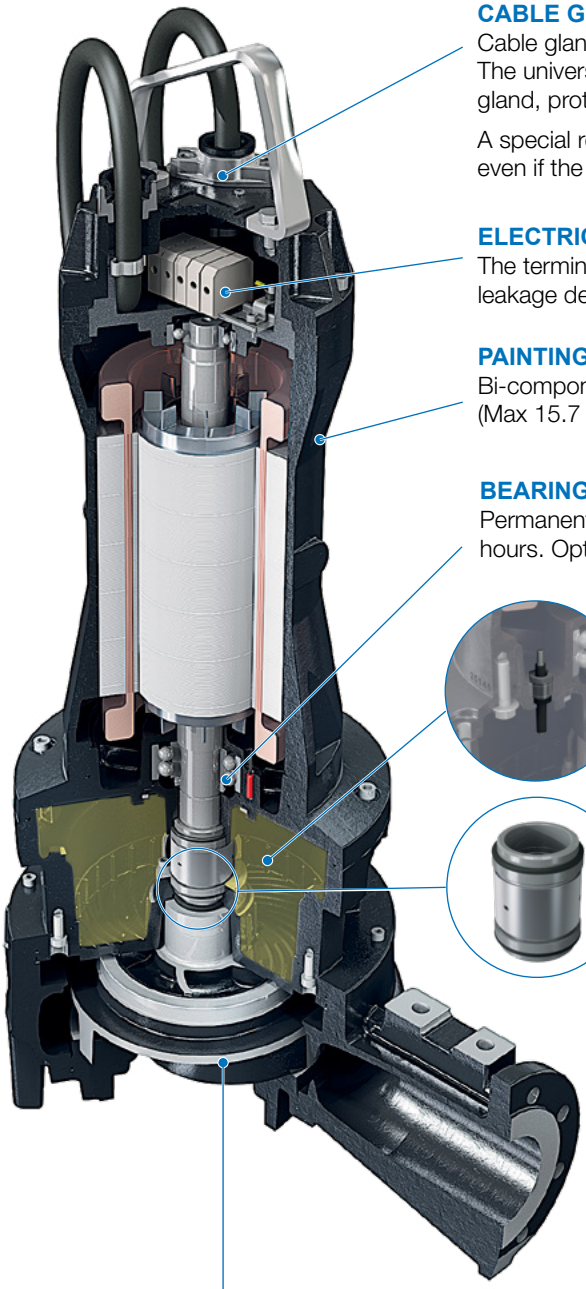

CABLE GLAND
Cable gland system with cable holder.
The universal thread ring-nut can be removed to fix a rigid or flexible duct to the cable gland, protecting the cable from damage.

A special resin seal is applied to prevent the possibility of water leaking into the motor even if the outer sheath is damaged.

ELECTRICAL CONNECTIONS
The terminal board is in an airtight compartment, which can be fitted with an optional leakage detection sensor.

PAINTING
Bi-component epoxy paint, standard thickness 7.9 Mils.
(Max 15.7 mils on request)

BEARINGS
Permanently lubricated, sealed bearings designed to provide up to 100,000 working hours. Optional sensors can be installed to monitor temperature and vibration.

WATER SENSOR
Sensor fitted as standard to detect water or moisture in the mechanical seal oil chamber.

MECHANICAL SEALS
Two silicon carbide mechanical seals in oil sump provide exceptional reliability even in heavy-duty conditions.

OIL LIFTER
An Oil Lifter encloses the mechanical seal and uses the centrifugal force generated by the rotating shaft and seal to pump oil to the upper seal faces. Upper and lower seal faces are positively lubricated even when extremely low oil levels exist.

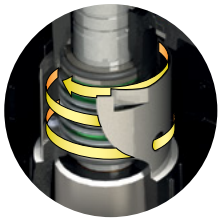

SUCTION and DISCHARGE
The suction and discharge flanges can be ordered with any standard pattern type (UNI, ANSI, BS, etc.) to ensure compatibility with existing systems and the accessories.

MQB
Open Channel Impeller

MQC
Chopper Impeller

MQU
Vortex Impeller

MQG
Grinder Impeller

MQS
High Head Impeller

FEATURES

FM APPROVED

DRY

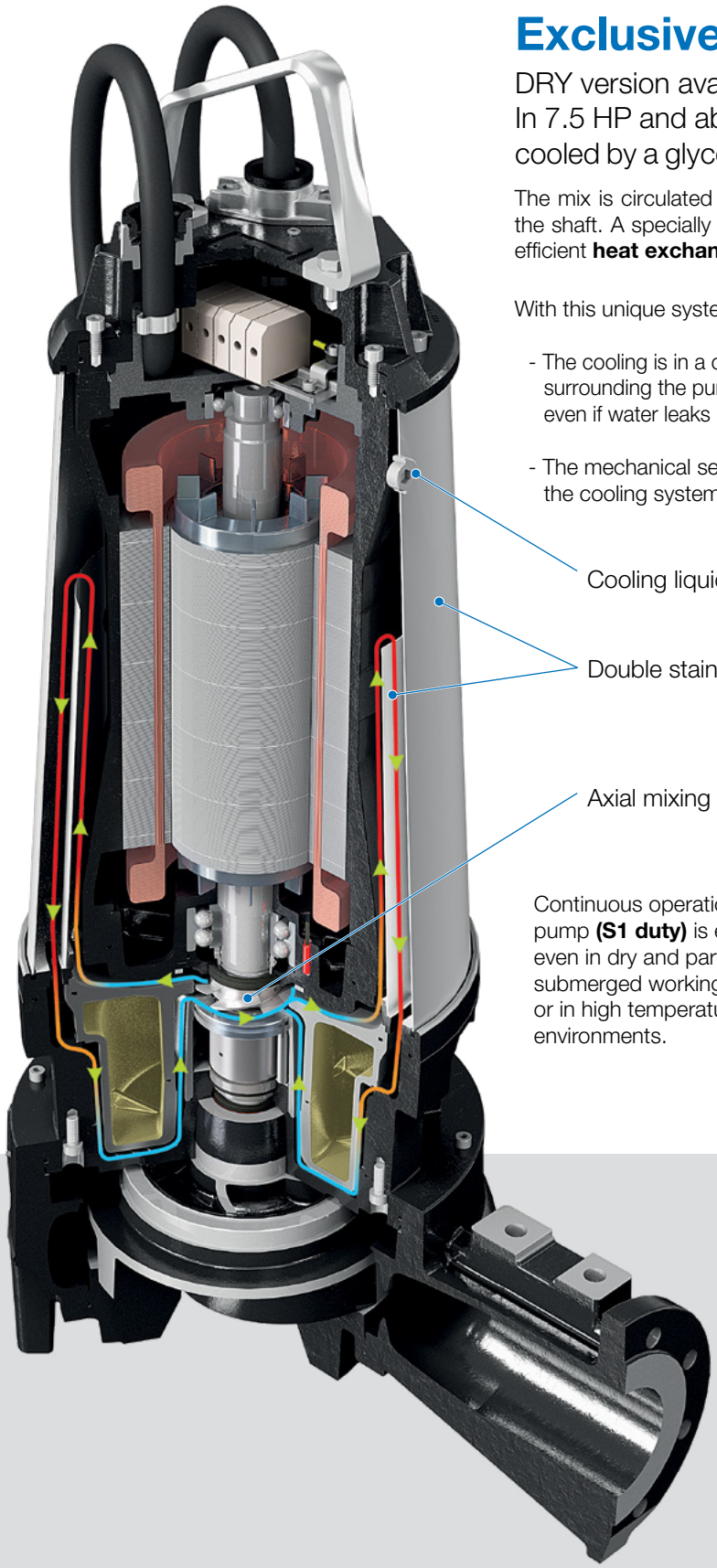

Exclusive cooling system

DRY version available with 5.5 HP and above.
In 7.5 HP and above of DRY version models, the motor is cooled by a glycol-water mix, closed loop cooling system.

The mix is circulated through the pump by an **axial impeller** mounted on the shaft. A specially designed stainless steel **double jacket** allows for the efficient **heat exchange** between the motor and the external environment.

With this unique system:

- The cooling is in a closed loop, never **in contact with the wastewater** surrounding the pump. This closed loop system cannot be contaminated even if water leaks into the oil chamber due to wear of the mechanical seal
- The mechanical seals are installed in an **oil chamber separated** from the cooling system and can be changed without draining the circuit

Cooling liquid inspection and filler cap

Double stainless steel jacket

Axial mixing impeller

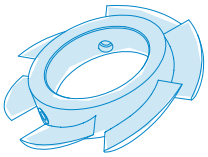

Continuous operation of the pump **(S1 duty)** is ensured even in dry and partially submerged working conditions or in high temperature environments.

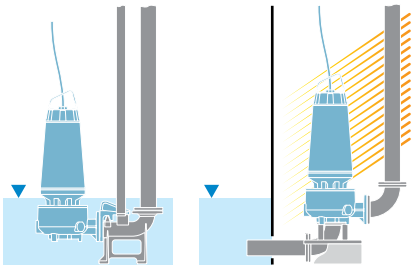

No unpleasant surprises

If the primary mechanical seal fails, the **sensor** warns that water is leaking into the oil chamber.

The secondary mechanical seal allows the pump to continue operating temporarily, allowing for the **scheduling of maintenance** with no need for unplanned system stoppages.

Premium efficiency motor

The heart of the **AVANT™ MQ Series** lies in its premium-efficiency, IE3 electric motors, designed to deliver high performance and withstand continuous duty cycles.

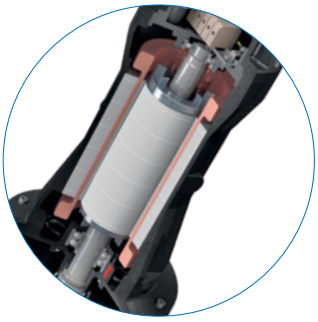

- **IE3 PREMIUM** efficiency
- **NEMA Class A**
- **Class H** insulation for all models in the range.

S1 duty mode operation even in water at a temperature of 104°F or above.

Clogging-proof hydraulics

All hydraulic components are designed for the highest efficiency and the **best performance** while still ensuring ample free passage.

All models with open channel impeller feature an **axial adjustment system** allowing the impeller clearance to be restored. This feature maintains performance even as components wear over time.

One of the biggest problems today in wastewater, is clogging of impellers due to fibrous and stringy materials.

The solution to this type of clogging is the **AVANT™'** open channel impeller pump, adopting this new and innovative **Anti-Clogging System (ACS)**. The **ACS** uses the centrifugal force of the impeller to pull out the stringy material via a spiral groove cut into the diffuser plate. This combination eliminates the fibrous material clogging of the impeller.

More reliability with new materials

Molib-Tech

The ***Molib-Tech* coating**, adopted by Tsurumi, is specially formulated to prevent and reduce wear due to erosion or cavitation on pump impellers, suction flanges and housings.

The ***Molib-Tech*** coating used by Tsurumi was specifically developed to:

- Increase component wear resistance
- Improve durability
- Keep performance consistent over time , even in extreme duty conditions.

Molib-Tech, is an alternative to conventional ceramic coatings. The ***Molib-Tech*** process **applies a layer of high strength material to the iron**, to improve the product's **mechanical resistance (to abrasive environments) and performance characteristics.** Unlike a conventional ceramic coating, the **uniform layer** of material does not cause any change in clearance or loss of performance.

Hard cast iron

Due to its chemical composition, Hard cast iron is stronger than commonly used grey cast iron and has a **hardness value between 450 and 500HB**.

The benefits of hard cast iron include added **strength and durability** over conventional cast iron. In the wastewater environment, this hard iron excels in long lasting performance.

Monitoring

The **AVANT™ MQ Series** can be fitted with optional sensors. These sensors allow for early detection of issues (motor / seals / electrical /temperature) giving the operator notice that action is needed to protect the pump from potential damage. The monitoring system also transmits data on the operation of the pump. This data can be used to **plan maintenance** and avoid sudden system shutdowns.

STANDARD

- Bi-metal thermal sensors (motor)
- Single-signal double leakage detector (S) to detect the infiltration into the oil chamber of the mechanical seals and/or into the motor.

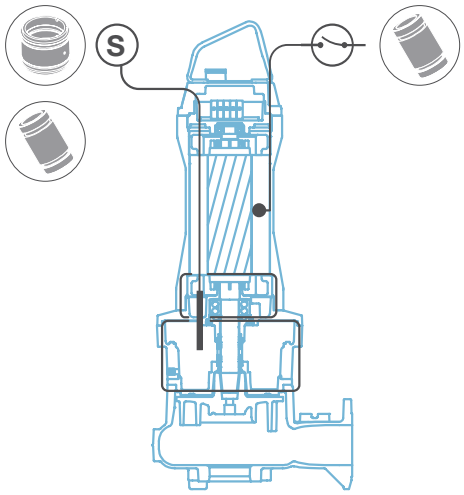

OPTIONAL

PTC/PT100 themistors (motor)

- Single probes for the detection of water or humidity inside:
  - **S1** oil chamber of the mechanical seals
  - **S2** motor
  - **S3** terminal board compartment
- PT100 sensor that signals bearing over temp condition
- Vibration sensor warning of any impeller imbalance due to damage or cavitation

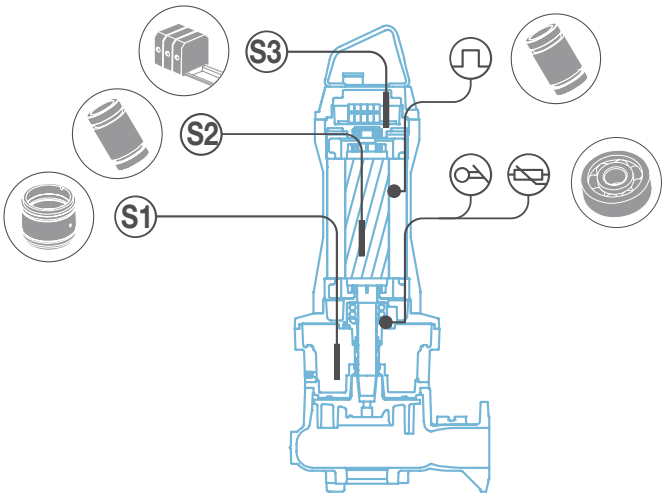

Maintenance

The **MQ Series** has been designed to allow for **ease of maintenance** and **quick replacement** of parts subject to normal wear.

- **CABLE**
  All electrical connections are easily accessible inside the top cover. A terminal board simplifies disconnection of the cable in the event of replacement.

- **MECHANICAL SEALS**
  Once the impeller has been removed, the oil chamber containing the mechanical seals is accessed by just removing the ring-nut that holds them in place.

- **OIL**
  The oil in the mechanical seal chamber can easily be replaced thanks to fill / drain plugs on the pump body. Pump oil can be changed with pump installed in a horizontal or vertical configuration.

- **BEARINGS**
  Tsurumi uses industry standard bearings. This allows for lower maintenance coast and ease of parts availability.

- **COOL**
  The glycol-water coolant mix used in the closed loop cooling jacket does not need changing even in the case of long term use.

MQB (Open Channel)

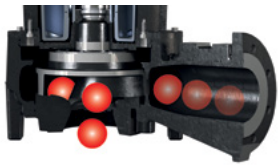

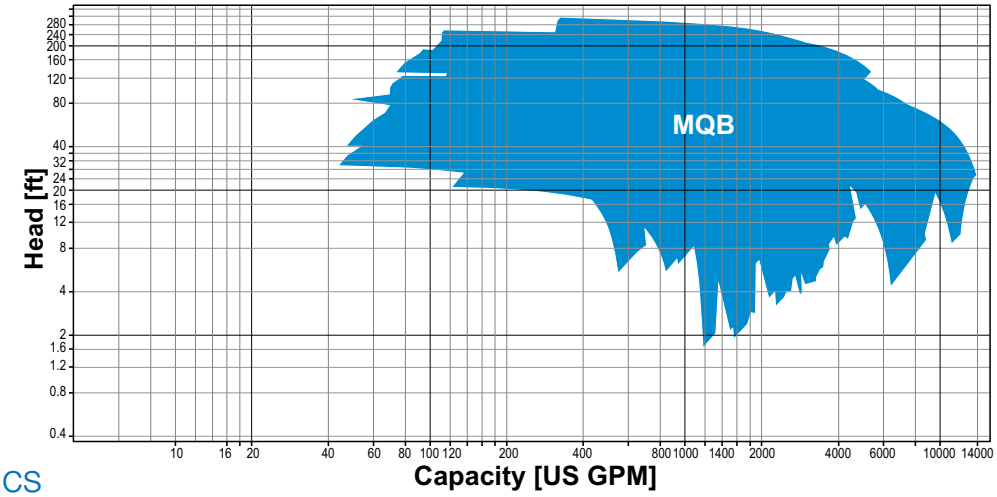

Operating characteristics

Power	4 - 215 HP
Poles	2 / 4 / 6
Discharge	3 - 16 in.
Free passage	Max. 6.3 x 4.33 in.
Max flow rate	13,600 US GPM
Max head	304 ft

Hydraulics

- Open channel impeller
- High hydraulic performances

Suitable for

- Solids laden wastewater
- Sewage treatment systems, civil and industrial lift stations

MQC (Chopper)

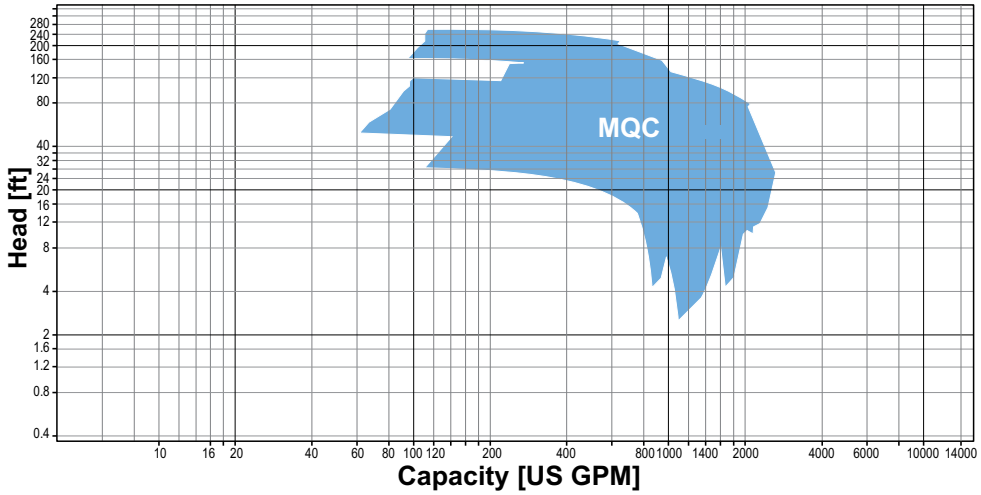

Operating characteristics

Power	10 - 60 HP
Poles	2 / 4 / 6
Discharge	4 - 6 in.
Free passage	Max. 3.125 in.
Max flow rate	2,060 US GPM
Max head	248 ft

Hydraulics

- Chopper impeller in *hard cast iron* as standard
- Solids grinding system and anti-fouling hydraulics for virtually unlimited free passage

> ***Efficiency of hydraulics only 3-5% less than that of a normal channel impeller***

Suitable for

- Liquids containing large-sized solids which can be broken down
- Industrial process solids handling

MQU (Vortex)

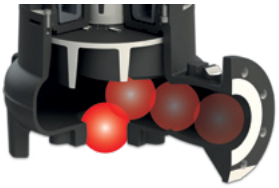

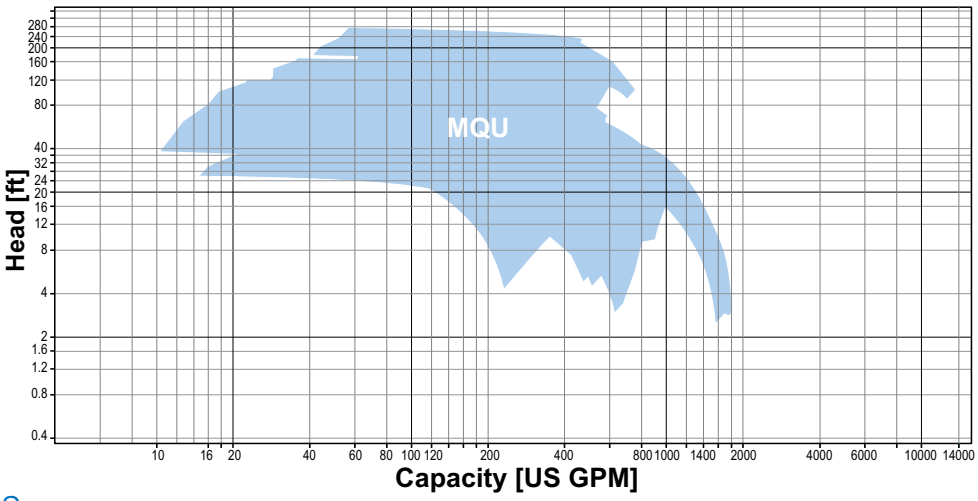

Operating characteristics

Power	4 - 50 HP
Poles	2 / 4
Discharge	2.5 - 6 in.
Free passage	Max. 5 in.
Max flow rate	1,420 US GPM
Max head	268 ft

Hydraulics

- Vortex impeller
- Full free passage

Suitable for

- Liquids containing suspended solids
- Sewage and storm water drainage systems

MQG (Grinder)

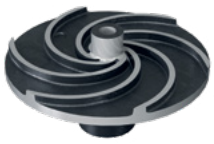

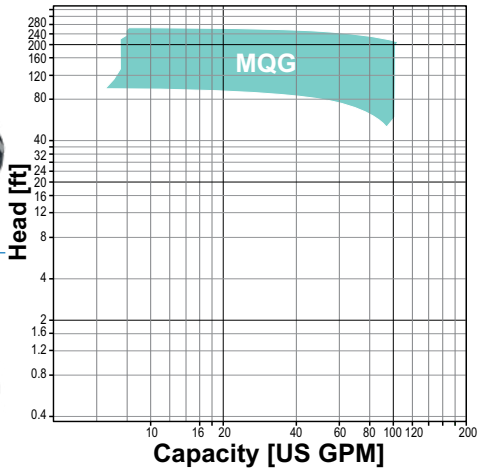

Operating characteristics

Power	5.5 - 15 HP
Poles	2
Discharge	2"
Free passage	-
Max flow rate	102 US GPM
Max head	256 ft

Hydraulics

- Cast iron multi channel open impeller
- Grinding system

Suitable for

- Soiled liquids containing fibers an filaments
- Commercial, industrial, and municipal applications

MQS (High Head)

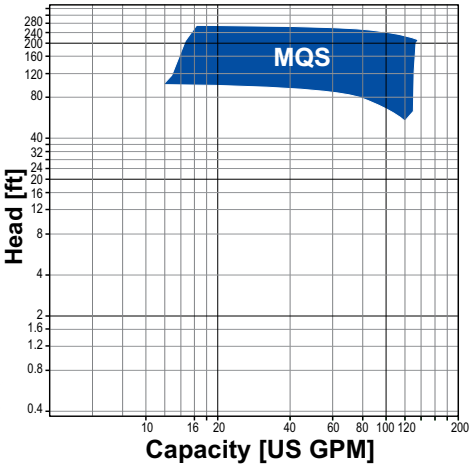

Operating characteristics

Power	5.5 - 15 HP
Poles	2
Discharge	2"
Free passage	Max. 0.9375"
Max flow rate	110 US GPM
Max head	260 ft

Hydraulics

- Cast iron multi-channel open impeller
- High manometric head

Suitable for

- Clean, rain and seepage water
- Agriculture, irrigation, fish farms and water features

TSURUMI PUMP™

BUILT FOR WORK®

Product colors may vary in actual appearance, features are highlighted for illustrative purposes.

TSURUMI (AMERICA), INC.

Headquarters: 1625 Fullerton Ct, Glendale Heights, IL 60139

Utah Office: 6216 West 9790 South, West Jordan, UT 84081

Tel: 1-888-878-7864 (Toll-Free) • 1-630-793-0127

www.tsurumipump.com

Your Dealer

Find us @tsurumiamerica

G01-SEP2020